PROPRIETARY AND CONFIDENTIAL

THE INFORMATION CONTAINED IN THIS DRAWING IS THE SOLE PROPERTY OF DYTRAN INSTRUMENTS INC. ANY REPRODUCTION IN PART OR AS A WHOLE WITHOUT THE WRITTEN PERMISSION OF DYTRAN INSTRUMENTS INC. IS PROHIBITED

1 CABLE LENGTH TOLERANCE

ENGLISH		METRIC	
≤1FT	+1/ -0 IN	≤0.3m	+25mm/-0mm
>1 FT - 5 FT	+2/ -0 IN	>0.3m-1.5m	+50mm/-0mm
> 5 FT - 10 FT	+4/ -0 IN	>1.5m-3m	+100mm/-0mm
>10 FT - 25FT	+6 / -0 IN	>3m-7.5m	+150mm/-0mm
>25 FT	+5% / -0%	>7.5m	+5%-0%

REVISIONS

REV	ECN	DESCRIPTION	BY/DATE	CHK	APPR
A	15763	INITIAL RELEASE, SAME AS X1	DP 06/16/20	KG	LN

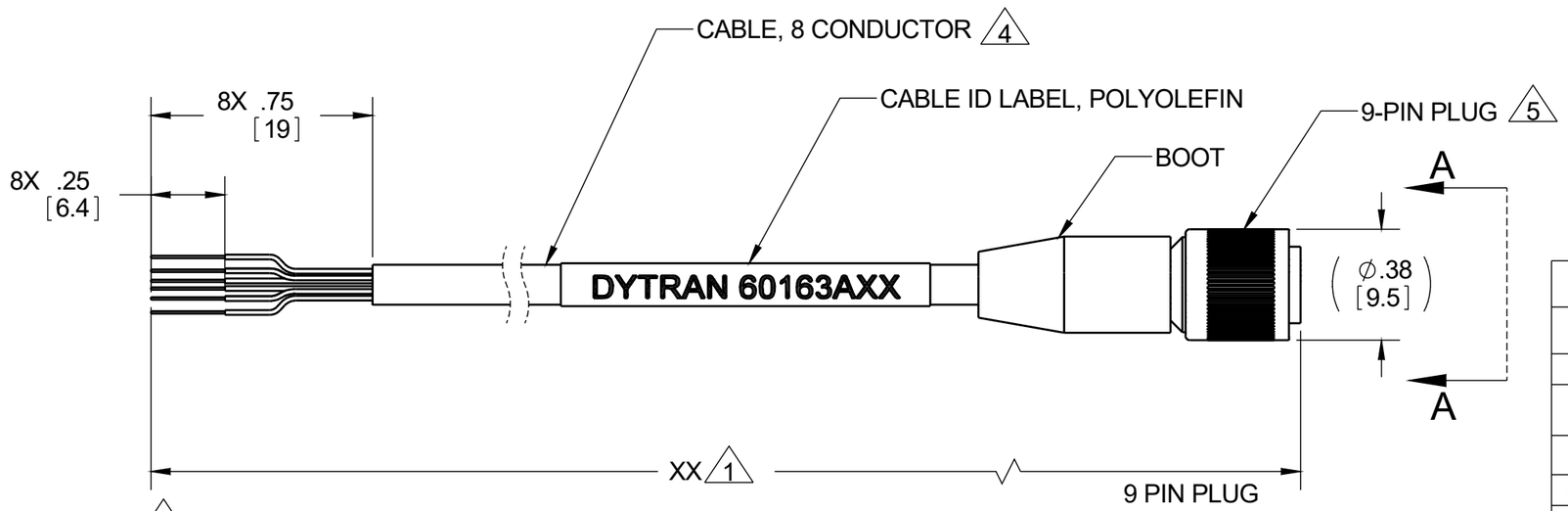

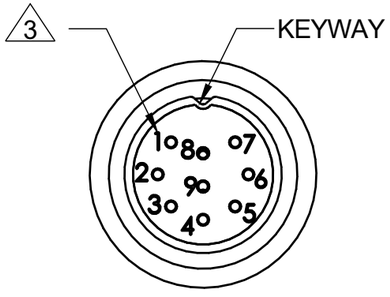

VIEW A-A
SCALE 4: 1

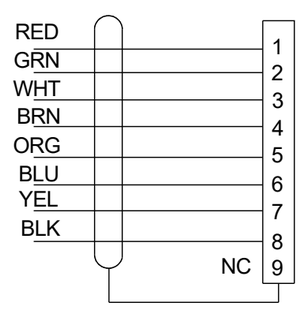

SCHEMATIC

4 CABLE SPECIFICATIONS

CONDUCTORS	AWG 26-7/34 TIN PLATED COPPER
FILLER	FIBERGLASS
SHIELDING	38 AWG SILVER PLATED COPPER BRAIDED 95% COVERAGE 7E-16C 36F/30B
JACKET	WHITE FEP .010 WALL THICKNESS
CABLE DIAMETER	.135 MAX
TEMPERATURE	392°F [200°C]
VOLTAGE	600 VOLTS

5 CONNECTOR SPECIFICATIONS

HOUSING MATERIAL AND FINISH	BRASS, GOLD PER MIL-G-45204 TYPE II, CLASS 1
CONTACTS: TYPE, MATERIAL, AND FINISH	SOCKET, BRASS, GOLD PER MIL-G-45204 TYPE II, CLASS 1
PLUG INSERT	PEEK
BOOT	FLUORO-SILICONE
WEIGHT	4.5 GRAMS MAX

5 SEE TABLE FOR CONNECTOR SPECIFICATIONS.

4 SEE TABLE FOR CABLE SPECIFICATIONS.

3 PIN NUMBERS SHOWN ARE FOR REFERENCE ONLY AND DO NOT APPEAR ON ACTUAL PART.

2. OPERATING RANGE: -67°F (-55°C) TO 248°F (120°C).

1 MODEL NO. 60163AXX ("XX" EQUALS LENGTH IN FEET).

NOTES: UNLESS OTHERWISE SPECIFIED

UNLESS OTHERWISE SPECIFIED:
INTERPRET DIM & TOL PER ASME Y14.5M - 1994.
REMOVE BURRS.
COUNTERSINK INTERNAL THDS 90° TO MAJOR DIA.
CHAM EXT THDS 45° TO MINOR DIA.
THD LENGTHS AND DEPTHS ARE FOR MIN FULL THDS.
DIMENSIONS APPLY AFTER FINISHING.

ALL MACHINED SURFACES.
TOTAL RUNOUT WITHIN .005.
BREAK SHARP EDGES .005 TO .010.
MACHINED FILLET RADII .005 TO .015.
WELDING SYMBOLS PER AWS A2.4.
ABBREVIATIONS PER MIL-STD-12.

UNLESS OTHERWISE SPECIFIED:
DIMENSIONS ARE IN INCHES.
DIMENSIONS IN BRACKETS [ ] ARE IN MILLIMETERS TOLERANCES ARE:

DECIMALS	METRIC	ANGLES
.XX ±.03	.X ±0.8	±1°
.XXX ±.010	.XX ±0.25	

APPROVALS		DATE
ORIG	DP	05/20/20
CHK	KG	06/17/20
APP	LN	06/24/20

DO NOT SCALE DRAWING

THIRD ANGLE PROJECTION USA

DYTRAN INSTRUMENTS, INC. Chatsworth, CA

TITLE: OUTLINE/INSTALLATION, CABLE ASSY, 9-PIN PLUG TO FLYING LEADS, LOW OUTGASSING

SIZE	CAGE CODE	DWG NO	REV
B	2W033	127-60163A	A

SCALE: 1:2 SHEET 1 OF 1